BIG DOORS AND WINDOWS

CATALOGUE OF ROLLER SHUTTERS

1/2025

TABLE OF *CONTENTS*

ABOUT COMPANY 05

ROLLER SHUTTERS 06

ADAPTIVE BLINDS 08

BUILT-IN ROLLER SHUTTERS 14

SUPERIMPOSED ROLLER SHUTTERS 18

FILLING OF LINTEL BOXES 34

ANTI-BURGLARY ROLLER SHUTTERS 38

ARMORS 40

PROFILES OF ADAPTIVE AND RECESSED ROLLER GUIDES 44

PROFILES OF TOP-MOUNTED ROLLER GUIDES 46

DRIVES AND ACCESSORIES 52

Our *company*

BIG DOORS AND WINDOWS is a globally operating Polish manufacturer of PVC, wood, aluminium and steel joinery. Windows and doors form the core of its continually expanding product range, complemented by sliding systems, window covers, sectional doors, property fences, mosquito nets and pergolas.

BIG DOORS AND WINDOWS is known for its ability to provide solutions tailored to particular markets and to meet all extraordinary expectations of individual customers. Its products reach nearly 40 export markets, including the EU, the USA, Australia and Africa.

A key asset of Big Doors & Windows is its transport fleet: lorries equipped with forklifts allow goods to be promptly unloaded at the customer's site. The export of products to the USA is carried out using regularly dispatched containers.

BIG DOORS AND WINDOWS partners can rely on comprehensive sales support from multilingual sales consultants and gain access to continuously developed online solutions - we sales tool and the benefit4u educational platform.

EXTERNAL ROLLER SHUTTERS

External roller shutters are an ideal solution for anybuilding. Functional and aesthetic, they blend perfectly with any architecturalstyle. They protect against excessive heat and light, and also increase the durability of windows. They guarantee privacy and deter intruders, making the home a comfortable and safe place.

Adaptive roller shutters

Adaptive roller shutters, also knownassurface-mountedorfacade-mountedshutters, are a desirable addition to any window today, providing usersnotonlywithprivacybutalsowithcontrolover the amount of light entering the room. Moreover, they enhance the appearanceofthefacadeandextendthelifespan of windows.

SK45

SK90

SKP

SKO-P

Adaptive roller blind *SK45*

The SK45roller shutter is the perfect solution for both new and existing buildings, regardless of the type of windows. It features a box cut at a 45-degree angle from the outside, giving the facade a sharp, geometric appearance. It can be installed directly on the facade or in the window frame recess.

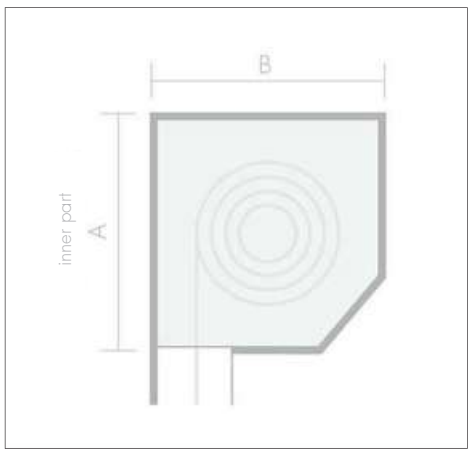

- minimum width of the case (electric drives): 450 mm
- minimum width of the box (manual control): 400 m
- maximum width of the box: 4500 mm
- available color range: RAL, ALUPROF

- has a universal design
- the box, guides and armor can be painted in any color from RAL palette
- mounting the roller shutter externally ensures no heat loss
- it allows for the installation of an integrated mosquito net
- available slats: PVC 37, PVC 52, PA 39, PA 43, PA 52
- available in the economical variant railing SK45

Maximum heights (window + box) in mm*

SK45			
Box	PA 39	PA 43	PA 52
137	1600	1410	900
165	2470	2500	1590
180	3060	3100	2060
205	4320	4150	2700

*The provided values are maximum overall heights of the roller shutter without integrated mosquito net, depending on factors such as the chosen control method.

Adaptive roller blind *SK90*

Theunique design of the SK90 rollershutter bringsa breathoffresh air to thinking about adaptive roller shutters. In addition to all the advantagesof thistype ofproduct,the box can also be a flush-mounted box. Simply add a plaster carrier rail at any time.

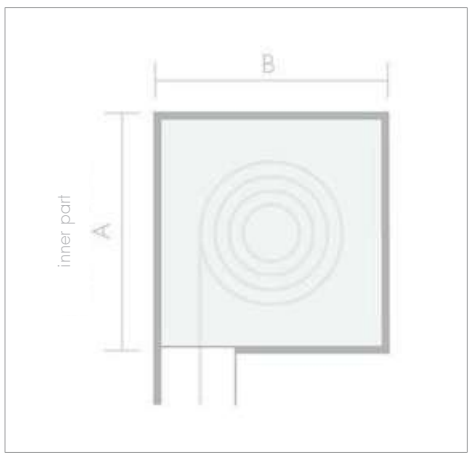

- minimum width of the case (electric drives): 450 mm
- minimum width of the box (manual control): 400 mm
- maximum width of the box: 4500 mm
- available color range: RAL, ALUPROF

- has a universal design
- its box, guides and armor can be painted in any color from RAL palette
- mounting the roller shutter externally ensures no heat loss
- it allows for the installation of an integrated mosquito net
- mounting on any type of building
- it's worth supplementing it with plaster carrier rails to use a flush-mounted junction box
- available slats: PVC 37, PVC 52, PA 39, PA 43, PA 52

Maximum heights (window + box) in mm*

SK90				
Box		PA 39	PA 43	PA 52
137		1600	1410	900
165		2470	2500	1590
180		3060	3100	2060
205		4320	4150	2700

*The provided values are maximum overall heights of the roller shutter without integrated mosquito net, depending on factors such as the chosen control method.

Adaptive roller blind *SKP*

System with a semi-circular box shape, which willperfectlycomplement the window joinery of an older building. The properly chosen angle of theupper part of the box harmonizes perfectly with the window recess. It has the features of SK45 and SKO-P, but additionally distinguishes the house with a unique design. It can be mounted both on the facade and in the recess.

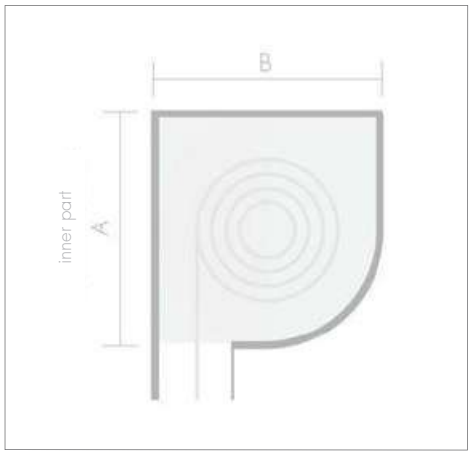

- minimum width of the case (electric drives): 450 mm
- minimum width of the box (manual control): 400 mm
- maximum width of the box: 4500 mm
- available color range: RAL, ALUPROF

- rounded revision, standing out from other models,
- the box, guides and armor can be painted in any color from RAL palette
- mounting the roller shutter externally ensures no heat loss
- possibility of integrated mosquito net installation
- mounting on any type of building
- available slats: PVC 37, PVC 52, PA 39, PA 43, PA 52

Maximum heights (window + box) in mm*

SKP				
Box		PA 39	PA 43	PA 52
137		1600	1410	900
165		2470	2500	1590
180		3060	3100	2060
205		4320	4150	2700

*The provided values are maximum overall heights of the roller shutter without integrated mosquito net, depending on factors such as the chosen control method.

Adaptive roller blind *SKO-P*

In thissystem, thehigh-quality aluminiumboxisrounded,makingitadecorative feature of the property. An extremely durablemodel.

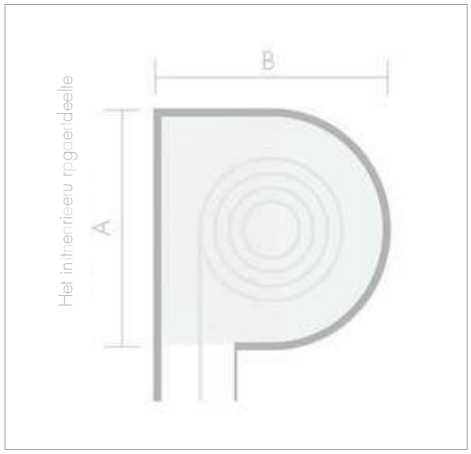

- minimum width of the case (electric drives): 450 mm
- minimum width of the box (manual control): 400 mm
- maximum width of the box: 4500 mm
- available color range: RAL, ALUPROF

- it has a unique shape
- its casing, guides, and housing can be painted in any color from the RAL palette.
- mounting the roller shutter externally ensures no heat loss
- It allows for the installation of an integrated mosquito net
- available slats: PVC 37, PVC 52, PA 39, PA 43, PA 52

Maximum heights (window + box) in mm*

SKO-P			
Box		PA 39	PA 43	PA 52
137		156	1410	850
165		0	2500	1640
180		243	2980	2060
205		0	4020	2700

*The provided values are maximumoverall heightsofthe roller shutter without integrate mosquito net, depending on factorssuchas the chosencontrol method.

18 3 2 6
7 0
21 437
2 0

RAL ALUPROF

Flush-mounted roller shutters

Flush-mounted roller shutters are an elegant, wall-integrated solution. Only the guides and the bottom part of the box are visible. They are entirely made of aluminum or a combination of aluminum and PVC, depending on the color or veneer chosen by the customer, and the selection of aesthetic options is impressive. They enhance window performance and prevent light and warmth from entering the house in an uncontrolled manner.

SP-E

Quadbox

Flush-mounted roller shutters *SP-E*

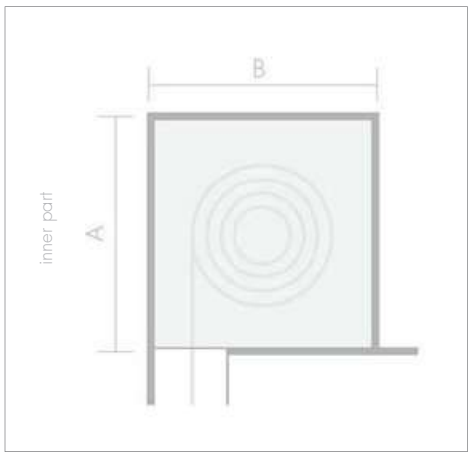

- minimum width of the case (electric drives): 450 mm
- minimum width of the box (manual control): 400 mm
- maximum width of the box: 4500 mm
- available color range: RAL, ALUPROF

• perfectly suited for new construction, including passive housing • the box and guides can be painted or laminated • standard render carrier rail length ranges from 15-105 mm • does not require any alteration to the building or windows. • it allows for the installation of an integrated mosquito net • available slats: PVC 37, PVC 52, PA 39, PA 43, PA 52

Maximum heights (window + box) in mm*

SP-E				
Box		PA 39	PA 43	PA 52
137		1600	1410	900
165		2470	2500	1590
180		3060	3100	2060
205		4320	4150	2700

*The provided values are maximum overall heights of the roller shutter without integrated mosquito net, depending on factors such as the chosen control method..

Flush-mounted roller shutters *QuadBox*

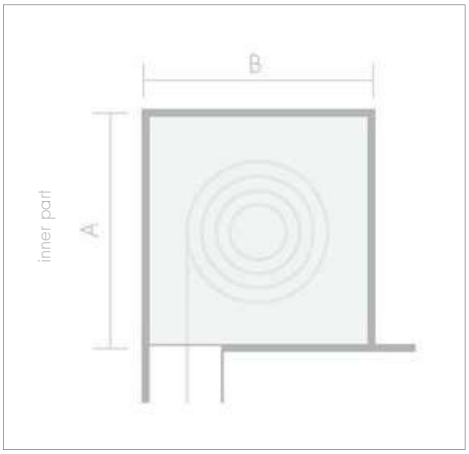

- minimum width of the case (electric drives): 450 mm
- minimum width of the box (manual control): 400 mm
- maximum width of the box: 4500 mm
- available color range: BeClever, RAL, AP* SAL*,GEA*

*Only Quadbox with PVC revision.

- ideal solution for new construction, including passive buildings.
- possibility of painting or veneering the box and guides
- option to choose PVC or aluminum revision.
- noheat loss, blinds installed independently of the interior
- itallows for the installation of an integrated mosquito net
- available slats: PVC 37, PVC 52, PA 39, PA 43, PA 52

Maximum heights (window + box)inmm*

Quadbox				
Box		PA 39	PA 43	PA 52
137		1600	1410	900
165		2470	2500	1590
180		3060	3100	2060
205		4320	4150	2700

*The provided values are maximum overall heights of the roller shutter without integrated mosquito net, depending on factors such as the chosen control method.

Top-mounted roller shutters

External roller shutters are one of the most popular choices during building finishing and renovation. They are appreciated for light control, excellent thermal insulation, and additional protection against break-ins. The noise caused by an intruder trying to force the shutter effectively alerts household members. Their installation does not require additional insulation, making them practical and efficient.

Expert XT

Elite XT

Exakt

Opoterm

Cleverbox Si

Cleverbox Ri

Neo XT

Roka Top 2

Roka Top 2 EX

Roka Top 2 PLUS

Roka Top 2 RG

Roka Top 2 RG EX

St yrotherm

Top-mounted roller shutter *Expert XT*

A versatile system distinguished by its simplicity of installation and operation. The installation is intuitive thanks to dedicated adapters available for various types of windows. Servicing has become quick due to easy-to-install drive brackets. The box can be additionally equipped with an integrated mosquito net, and larger structures - with steel reinforcement. All this is prepared for better protection of residents and stability of the structure. Expert XT comes in two shades of white, and less aesthetic elements can be concealed with covers.

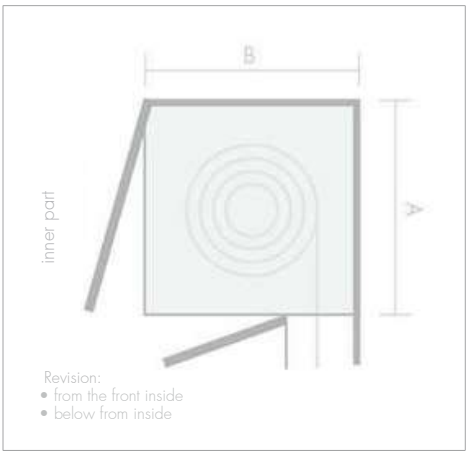

- minimum box width (electric drives): 450 mm
- minimum width of the box (manual control): 400 mm
- maximum width of the box: 5500 mm
- max. frame depth for bottom access inspection: 85 mm
- available color range: RAL, AP, SAL, GEA.

Maximum heights (window + box) inmm*

Expert XT					
Box			PA 39	PA 43	PA 52
16			162	150	100
5			0	0	0
18			225	225	150
5	5	0	0	0	0
22	22	25	350	375	250
0	0	5	0	0	0

*The provided values are maximum overall heights of the rollershutter withoutintegrated mosquitonet, depending on factorssuch as thechosen controlmethod.

- its installation and maintenance are simple
- it is dedicated to PVC, aluminum, and wooden windows
- it can be plastered both externally and internally
- it allows for the installation of an integrated mosquito net
- available slats: PVC 37, PVC 52, PA 39, PA 43, PA 52

Top-mounted roller shutter *Elite XT*

In this universal model, installation and maintenance are simple thanks to the use of drive brackets and frame adapters – dedicated ones for PVC or universal ones for aluminum and wood. In the Elite XT, individual components connect together like building blocks. A distinguishing feature of the system is the bottom-mounted external inspection, allowing for its use and plastering even on frames with above-average installation depths. The Elite XT is available in standard white and the even brighter Salamander white.

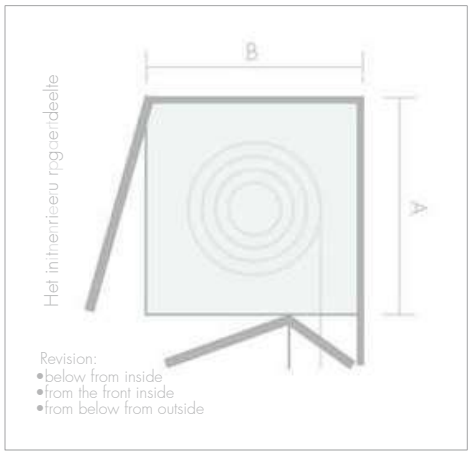

- minimum width of the case (electric drives): 450 mm
- minimum width of the box (manual control): 400 mm
- maximum width of the box: 5500 mm
- max. frame depth when bottom-hung: 85 mm*

  *restriction applies to revisions below from inside.
- available color range: RAL, AP, SAL, GEA

- allows for installation on windows with large frame depths thanks to the external inspection
- its installation and maintenance are simple
- it is dedicated to PVC, aluminum, and wooden windows
- It allows for the installation of an integrated mosquito net
- available slats: PVC 37, PVC 52, PA 39, PA 43, PA 52

Maximum heights (window + box) inmm*

Elite XT				
Box		PA 39	PA 43	PA 52
17		162	150	100
5		0	0	0
20		225	225	150
0	0	0	0	0
24	25	350	375	250
0	5	0	0	0

*Theprovided values are maximumoverall heightsof the rollershutter withoutintegrated mosquitonet, depending on factorssuch as thechosen controlmethod.

Top-mounted roller shutter *Exakt*

The system has been on the market for many years and remains popular. It is characterized by its simple design and is chosen for its highly refined key features. Easy access to the roller mechanism facilitates maintenance. It is suitable for both PVC and aluminum systems.

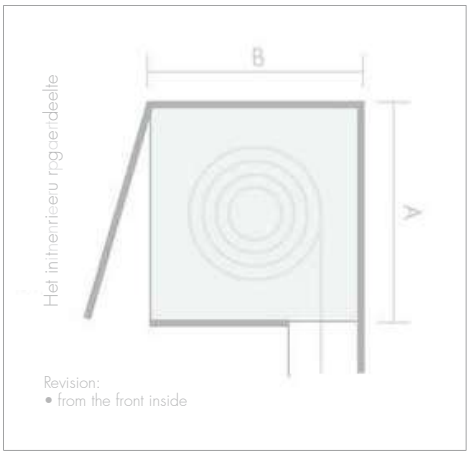

- minimum width of the case (electric drives): 450 mm
- minimum width of the box (manual control): 400 mm
- maximum width of the box: 2500 mm
- available color range: RAL, AP, SAL, GEA

- its installation and maintenance are simple
- it is dedicated to PVC, aluminum, and wooden windows
- it can be plastered externally and internally
- available slats: PVC 37, PA 39, PA 43

Maximum heights (window + box) in mm*

Exakt				
Box			PA 39	PA 43
15			160	160
5			0	0
18			240	240
0	0	5	0	0
22	22	24	350	350
0	0	5	0	0

*The provided values are maximum overall heights of the roller shutter without integrated mosquitonet, depending on factors such as the chosen control method.

Top-mounted roller shutter *Opoterm*

It features proven solutions that enable easy installation and maintenance. Its distinguishing characteristic is its sophisticated appearance, achieved through additional masking elements. These include caps covering the screws from the inside and a rounded internal plate. The roller shutter can be installed without compromising the structural integrity of large windows. The Opoterm is available in the RENO version, which is dedicated to older buildings with renovation fin frames.

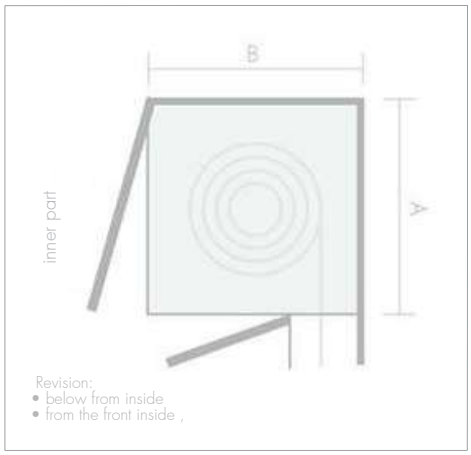

- minimum width of the case (electric drives): 450 mm
- minimum width of the box (manual control): 400 mm
- maximum width of the box: 5500 mm
- max. frame depth for bottom access inspection: 100 mm
- available color range: RAL, AP, SAL, GEA

Maximum heights (window + box)inmm*

Opoterm			
Box	PA 39	PA 43	PA 52
175	1890	1770	1170
210	3310	3250	2280
240	4770	3680	3230

*The provided values are maximum overall heights of the roller shutter without integrated mosquito net, depending on factorssuch as the chosen control method.

- it is dedicated to PVC and aluminum windows
- it allows for the installation of an integrated mosquito net
- it can be plastered externally and internally
- side caps are available for purchase
- there is an option for a rounded internal front plate
- the RENO version is ideal for renovated PVC windows
- available slats: PVC 37, PVC 52, PA 39, PA 43, PA 52

0
25
5

Top-mounted roller shutter *Cleverbox Si*

The roller shutter has been designed with the aim of reducing household and business maintenance costs. It possesses all the advantages of superimposed systems, and additionally, it can be equipped with Neopor, which is expanded polystyrene providing better thermal and acoustic insulation parameters. The steel reinforcement allows for the roller shutter to be used even on structures with large surfaces without concerns about stability, while side caps discreetly mask unattractive elements.

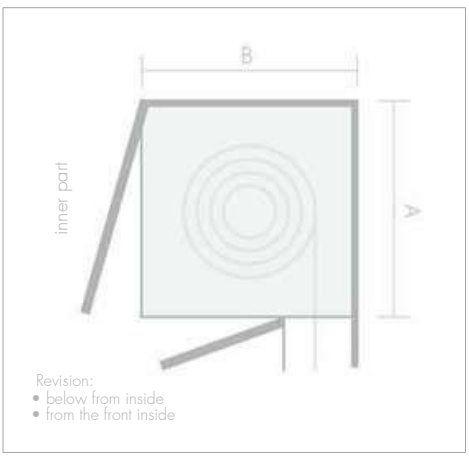

- minimum width of the case (electric drives): 450 mm
- minimum width of the box (manual control): 400 mm
- maximum width of the box: 5500 mm
- max. frame depth for bottom access inspection: 98 mm
- available color range: RAL, AP, SAL, GEA

- it is dedicated to PVC and aluminum windows
- side caps are available for purchase,
- It allows for the installation of an integrated mosquito net
- It can be plastered externally and internally
- the variant with Neopor provides better thermal and acoustic insulation.
- available slats: PVC 37, PA 39, PA 43

Maximum heights (window + box)inmm*

Cleverbox Si				
Box			PA 39	PA 43
16			200	200
5			0	0
20			325	325
5	5	5	0	0
24	24	25	425	450
5	5	5	0	0

*Theprovided values aremaximum overallheights of therollershutter withoutintegrated mosquitonet, dependingonfactors suchasthe chosen controlmethod.

Top-mounted roller shutter *Cleverbox Ri*

The roller shutter has all the advantages of the Cleverbox model, differing in design. The rounded inspection looks particularly good in a French landscape. Great for PVC and aluminum windows.

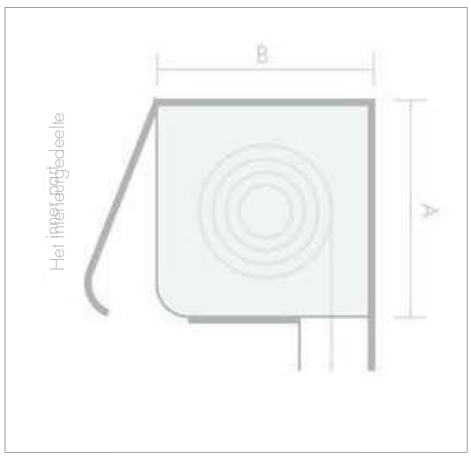

- minimum box width (electric drives): 450 mm
- minimum width of the box (manual control): 400 mm
- maximum width of the box: 5500 mm
- available color range: RAL, AP, SAL, GEA

- It has a unique shape of the casing from the inside
- It has simple installation and servicing and is dedicated to PVC and aluminum windows
- It allows for the installation of an integrated mosquito net
- optional side covers
- max. frame depth for bottom access inspection: 98 mm
- available slats: PVC 37, PA 39, PA 43

Maximum heights (window + box)inmm*

Cleverbox Ri			
Box		PA 39	PA 43
165		1250	150
205		2500	0
			2 375
			0

*The provided values are maximum overall heights of the roller shutter without integrated mosquito net, depending on factors such as the chosen control method.

Top-mounted roller shutt *Neo XT*

The roller shutter is perfect for energy-efficient investments, providing excellent protection for residents against excessive heat and noise. Dedicated entirely to finished buildings, it is easy to install and comfortable to service thanks to many well-thought-out solutions. The interior features proven elements known from Elite XT and Expert XT, and its casing has improved insulation parameters.

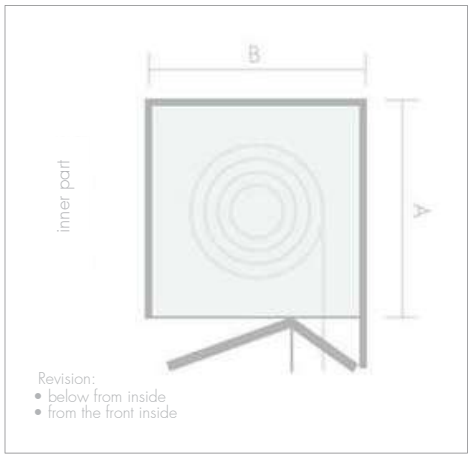

- minimum width of the case (electric drives): 450 mm
- minimum width of the box (manual control): 400 mm
- maximum width of the box: 5500 mm
- max. frame depth when bottom-hung: 85 mm*

*the limitation applies to bottom access inspection from the inside.

Maximum heights (window + box) inmm*

Neo XT			
Box		PA 39	PA 43	PA 52
26		3800	4200	2700
0				

*The provided values are maximum heights of the roller shutter without integrated mosquitonet, depending on factorssuchasthechosen control method.

- it has simple installation
- it is dedicated to PVC, aluminum, and wooden windows
- it has a durable construction,
- it allows for the installation of an integrated mosquito net
- it is characterized by very good thermal and acoustic insulation.
- available slats: PVC 37, PVC 52, PA 39, PA 43, PA 52
- the box is available in a version for cladding with clinker

Top-mounted roller shutter *Roka-Top 2*

Roka-Top 2 offers a combination of the advantages of lintel and superimposed systems. The polystyrene casings, provided by a pioneer supplier, guarantee time savings during installation, as the components are pre-assembled at the production stage. The roller shutter is an excellent choice for new construction, providing very good acoustic and thermal insulation. With its reinforced casing construction, it is extremely durable, even when it has a large size. It's a long-term solution.

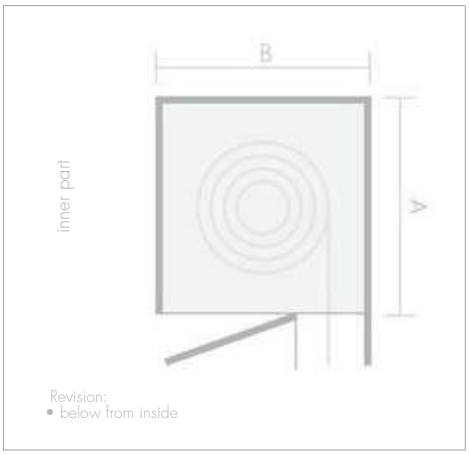

- minimum width of the case (electric drives): 450 mm
- minimum width of the box (manual control): 400 mm
- maximum width of the box: 5500 mm
- max. frame depth: 92 mm

- it is dedicated to PVC
- it has a reinforced casing construction
- it has very good thermal and acoustic insulation parameters
- available slats: PVC 37, PVC 52, PA 39, PA 43, PA 52
- its casing is available in three construction variants

Maximum heights (window + box)inmm*

Roka Top 2				
Box		PA 39	PA 43	PA 52
25		325	350	280
0		0	0	0
30	30	280/300/345/3	450	425	330
0	0	65	0	0	0

*The provided values are maximum heights of the shutter without integrated mosquitonet, dependingonfactorssuchasthechosencontrol method.

available construction variants:

Monolithic plaster

WDVS

Clinker

Top-mounted roller shutt *Roka-Top 2 EX*

Another level of excellence among roller shutters. A model above Roka-Top 2, differing in installation method and the possibility of inserting a mosquito net.

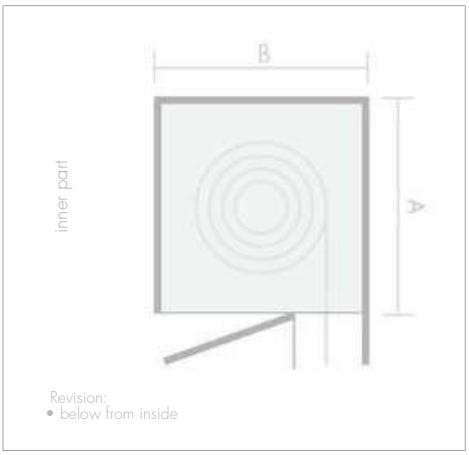

- minimum width of the case (electric drives): 450 mm
- minimum width of the box (manual control): 400 mm
- maximum width of the box: 5500 mm
- max. frame depth: 92 mm

- it is dedicated to PVC, aluminum, and wooden windows
- it is characterized by easy installation
- it allows for the installation of an integrated mosquito net
- it has a reinforced casing construction
- available slats: PVC 37, PVC 52, PA 39, PA 43, PA 52

Maximum heights (window+box)inmm*

Roka Top 2 EX			
Box	PA 39	PA 43	PA 52
25	325	350	280
0	0	0	0
3 0	4 5 0	42 5	330
0	0	0	0

*The provided values are maximum overall heights of the roller shutter without integrated mosquito net, depending on factors such as the chosen control method.

available construction variants:

Monolithic plaster

WDVS

Clinker

Top-mounted roller shutt *Roka-Top 2 PLUS*

It has the best features of Roka-Top 2, and thanks to the inspection flap without chambers, it allows for excellent thermal and acoustic insulation. Extremely durable and robust, as the system is mounted directly onto the frame.

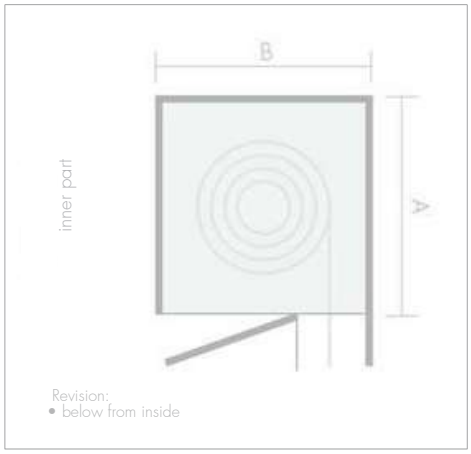

Maximum heights (window+box)inmm*

Roka Top 2 PLUS				
Box	[redacted]	PA 39	PA 43	PA 52
25	[redacted]	325	350	2800
0	[redacted]	0	0	3300
3 0	30	280/30 0/345/3	450	425
0	0	65	0	0

*The provided values are maximum overall heights of the roller shutter without integrated mosquito net, dependingonfactorssuchasthechosencontrolmethod.

- minimum width of the case (electric drives): 450 mm
- minimum width of the box (manual control): 400 mm
- maximum width of the box: 5500 mm
- max. frame depth: 92 mm

- it is dedicated to PVC
- it has a reinforced casing construction,
- it has very good thermal and acoustic insulation parameters
- installation takes place without additional profiles between the frame and the casing
- available slats: PVC 37, PVC 52, PA 39, PA 43, PA 52
- its casing is available in three construction variants

available construction variants:

Monolithic plaster

WDVS

Clinker

Top-mounted roller shutt Roka-Top 2 RG

Roller shutter for passive construction due to a durable construction that eliminates thermal bridges. An optimal combination of superimposed and built-in roller shutters. Ideal for PVC and aluminum windows. The inspection flap is located on the outside, allowing the product to be installed on any window.

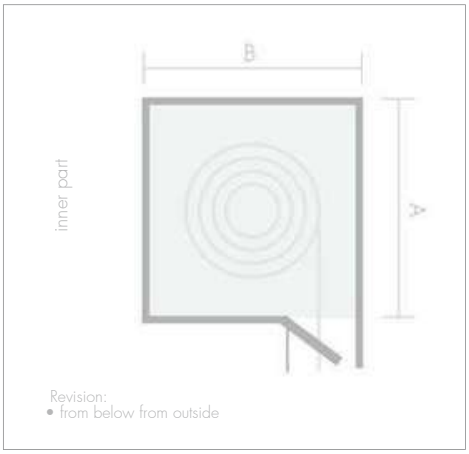

- minimum width of the case (electric drives): 450 mm
- minimum width of the box (manual control): 400 mm
- maximum width of the box: 5500 mm.

- it is dedicated to PVC, aluminum
- it has very good thermal and acoustic insulation parameters,
- its casing is available in multiple variants
- its casing is completely invisible from the inside after plastering.
- available slats: PVC 37, PVC 52, PA 39, PA 43, PA 52

Maximum heights (window+box)inmm*

Roka Top 2 RG				
Box	[redacted]	PA 39	PA 43	PA 52
25	[redacted]	325	350	280
0	[redacted]	0	0	0
3 0	28 0/ 300/ 345/ 3	4 5 0	42 5	330
0	65	0	0	0

*The provided values are maximum overall heights of the roller shutter without integrated mosquito net, dependingonfactorssuchasthe chosen controlmethod.

available construction variants:

Monolithic plaster

WDVS

Clinker

Top-mounted roller shutt *Roka-Top 2 RG EX*

An improved solution of the Roka-Top 2 RG system. The new feature is the exceptionally easy installation, made possible by the use of profiles utilized in PVC roller shutters. This reduces installation time and expands compatibility with various window systems.

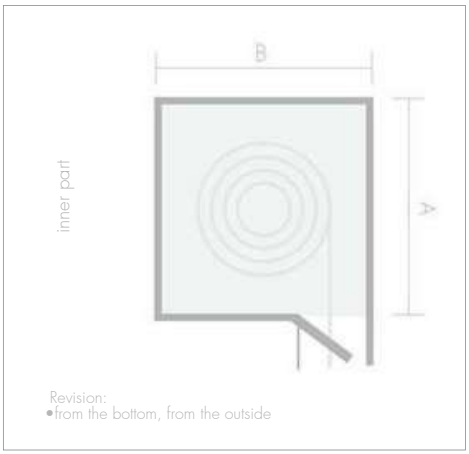

Maximum heights (window+box)inmm*

Roka Top 2 RG EX				
Box	[redacted]	PA 39	PA 43	PA 52
25	[redacted]	325	350	2800
0	[redacted]	0	0	3300
3 0	30	280/30 0/345/3	450	425
0	0	65	0	0

*The provided values are maximum overall heights of the roller shutter without integrated mosquito net, dependingonfactorssuchasthechosencontrolmethod.

- minimum width of the case (electric drives): 450 mm
- minimum width of the box (manual control): 400 mm
- maximum width of the box: 5500 mm

- it is dedicated to PVC, aluminum, and wooden windows,
- it has a reinforced casing construction
- it has very good thermal and acoustic insulation parameters
- it is characterized by easy installation
- available slats: PVC 37, PVC 52, PA 39, PA 43, PA 52
- its casing is available in three construction variants

available construction variants:

Monolithic plaster

WDVS

Clinker

Top-mounted roller shutt ***Styroterm***

Superimposed casing for projectsbeforeplastering. It ensuresusercomfort and provides goodthermal and acoustic insulation. The casing with a bottom access inspection, mounted externally, is completely invisible from the inside.

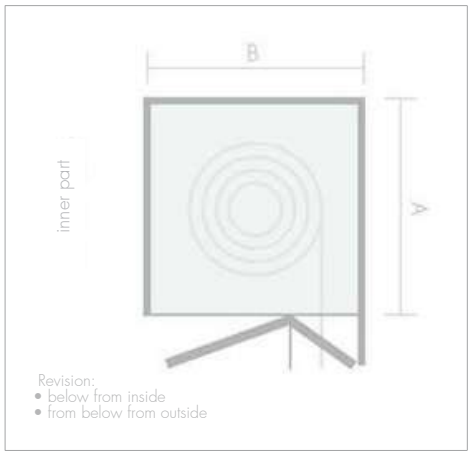

- minimum width of the case (electric drives): 450 mm
- minimum width of the box (manual control): 400 mm
- maximum width of the box: 3000 mm
- max. frame depth for bottom access inspection: 100 mm*

*the limitation applies to bottom access inspection from the inside

- available color range: RAL, AP, SAL, GEA

Maximum heights (window+box)inmm*

SKB Styroterm				
Box		PA 39	PA 43	PA 52
26		2930	267	174
0		4710	0	0
30	30		470	291
0	0		0	0

*The provided values are maximum overall heightsoftheroller shutterwithout integrated mosquito net, depending on factors such as the chosencontrol method.

- ideal for PVC and aluminum windows
- it has very good thermal and acoustic insulation parameters
- easy to install
- it allows for the installation of an integrated mosquito net
- available slats: PVC 37, PVC 52, PA 39, PA 43, PA 52

Lintel box *filling*

The client has complete flexibility in choosing by being able to purchase just the components for the roller shutter boxes already installed in their home. They decide which features and design they need. High-level savings and customization.

SDZ

This product is a solution for homeowners with lintel roller shutters who need to replace the shutter itself. The installation process is quick and efficient. It can be operated manually with a strap and winder, with a crank mechanism, or electrically. The product is often used in renovation projects in France and Italy.

SKN

This isaset of elements prepared for self-assembly. It is compatible with all types of lintel boxes.

SDZ

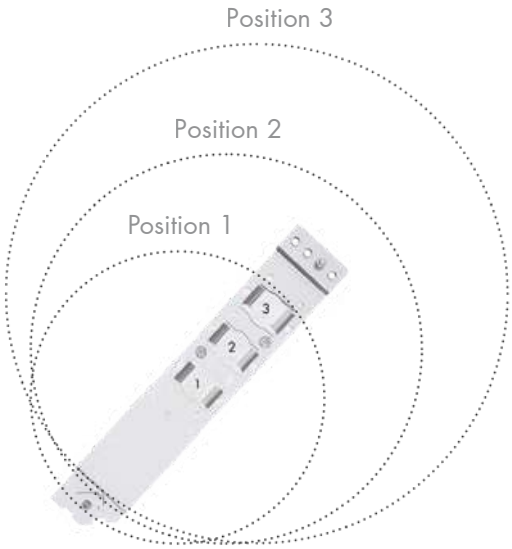

SDZ	
Winding tube position	Diameter of armour winding
Position 1	≤ 225
Position 2	165
Position 3	≤ 270

SKN

Anti-burglary roller shutters

Anti-burglaryexteriorshuttersguaranteesecurity.Specialreinforcementsinthearmorandguidesprovide RC2 or RC3 protection class, effectively deterring burglars and allowing homeowners to sleep peacefully.

The only certified anti-burglary system - with RC2 class for the PE41 curtain and RC3 class for the PE55 curtain. The system is designed for adaptive boxes in any shape, as well as for SP-E built-in boxes. Thanks to the latch system in the guides and the reinforced guides, manual break-in attempts are significantly hindered. Additionally, the high and heavy PE55 profile in the RC3 variant is resistant to any attempt at breaching it. Importantly, due to the locking mechanisms and the weight of the curtain, anti-burglary shutters can only be operated with electric drives.

- patented latch system in the guides and bottom rail
- extruded curtain profile
- specially designed reinforced guides
- burglary resistance class RC2 or RC3,
- minimum box width (electric drives): 600mm
- available color range: RAL, ALUPROF

Maximum heights (window + box)inmm*

anti-burglary SAR		
Profile	PE41(RC2)	PE55 (RC3)
max. width	2600 mm	2800 mm
max. height	2790 mm	1800 mm / 4480 mm*
max. area	7, 25 m2	4,3 m2 / 9,6 m2*

*applies to SK45 enclosure, 300 mm

RAL ALUPROF

Armos

Fitted to the window, the armor allows for thermal insulation of the room and enhances the appearance of the roller blind.

PA

Aluminum armors feature a sleek, universal design and are resistant to abrasion and discoloration. They are lightweight and environmentally friendly. The **PA 43** model allows for taller constructions, while the **PA 52** model is suitable for very wide spans.

PA:
This stands for Aluminum Profile filled with polyurethane foam, the most commonly used and most optimal armor, used in shutters.

PA 39	
Weight per 1m2 (kg)	2,8
Profile thickness (mm)	9
Number of slats per 1m height (pcs)	25,6
Maximum product surface area (m^2)	6
Profile height (mm)	39

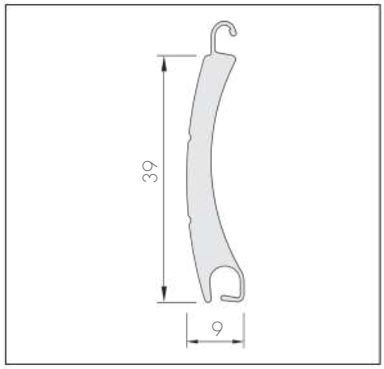

PA 43	
Weight per 1m2 (kg)	2,6
Profile thickness (mm)	8,8
Number of slats per 1m height (pcs)	23,2
Maximum product surface area (m^2)	9*
Profile height (mm)	43

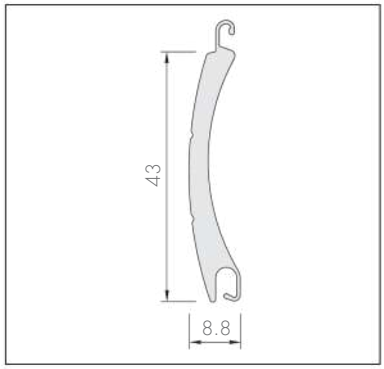

*The system provider's recommended stabiility of the armour is obtained for an area of up to 7 m^2.
Above this value, a slight rippling of the shutter can occur.
-However, this does not affect the functionality and the roller shutter fulfils all the criteria set by the standard.

PA 52	
Weight per 1m² (kg)	3
Profile thickness (mm)	13
Number of slats per 1m height (pcs)	19
Maximum product surface area (m²)	8
Profile height (mm)	52

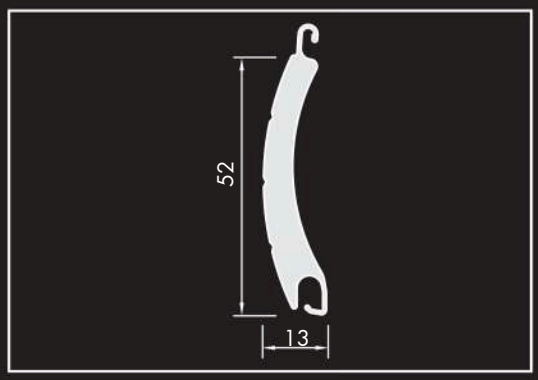

PVC

Quiet, weather-resistant, and easy-to-clean curtains are popular on the German market. PVC 37 fits windows up to 1.6 meters wide, while PVC 52 fits windows up to 3 meters wide.

So, a armor made of plastic, available in three colors from the Aluprof palette: Ultra White, Grey, Beige, without the possibility of painting.

PVC 37	
Weight per 1m2 (kg)	3,5
Profile thickness (mm)	8
Number of slats per 1m height (pcs)	27
Maximum product surface area (m^2)	3
Profile height (mm)	37

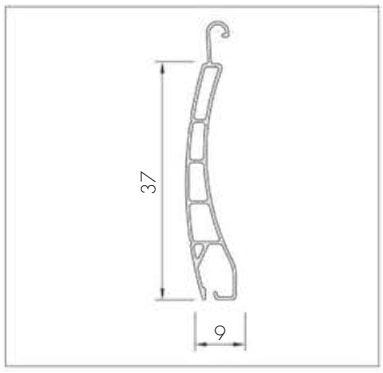

PVC 52	
Weight per 1m2 (kg)	4
Profile thickness (mm)	14
Number of slats per 1m height (pcs)	19
Maximum product surface area (m^2)	4,3
Profile height (mm)	52

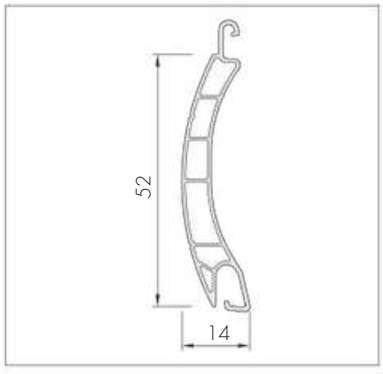

PE

For anti-burglary shutters, curtains made of extruded aluminum will be indispensable. They are durable, robust, and can be used with electric drives. Our models are powder-coated, ensuring that the color does not fade and the paint does not chip.

PE: This stands for Extruded Curtains, used in the adaptive and built-in SAR anti-burglary shutter system, with an RC2 burglary resistance certificate for the PE41 profile and RC3 for PE55. Curtains are available in several Aluprof colors and can be painted to any color from the RAL Palette.

PE 41	
Weight per 1m2 (kg)	7,4
Profile thickness (mm)	8,5
Number of slats per 1m height (pcs)	24
Maximum product surface area (m^2)	8,5
Profile height (mm)	41

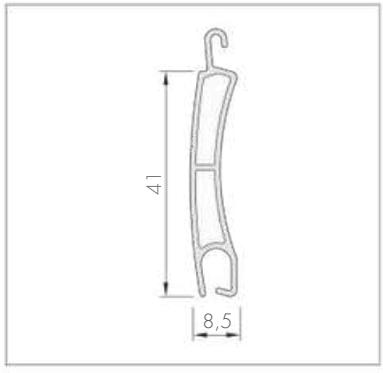

PE 55	
Weight per 1m2 (kg)	8,7
Profile thickness (mm)	14
Number of slats per 1m height (pcs)	18
Maximum product surface area (m^2)	15
Profile height (mm)	55

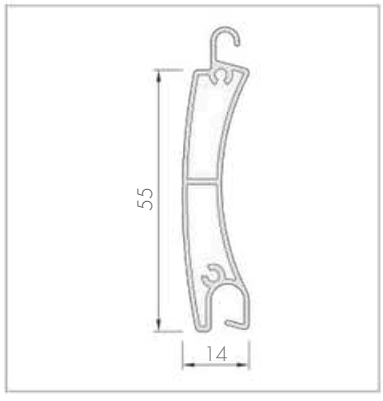

Roller shutter guide cross-sections
adaptive and flush-mounted

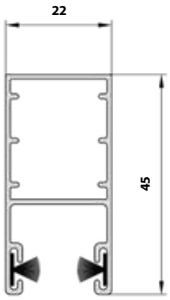

• PP45
•SK45•SK90•SKP•SKO-P•Railing SK45
•SP-E•QuadBox

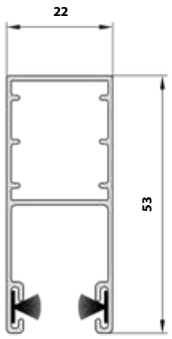

• PP53
•SK45•SK90•SKP•SKO-P•Railing SK45
•SP-E•QuadBox

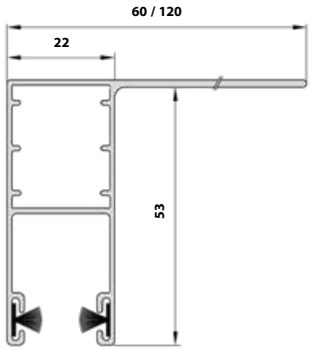

• PK53 / PK53 120
•SK45•SK90•SKP•SKO-P•Railing SK45
•SP-E•QuadBox

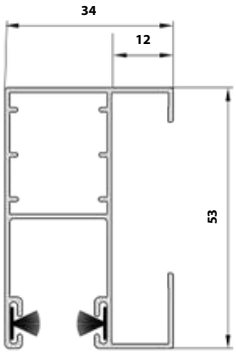

• PP53 ODS
•SK45•SK90•SKP•SKO-P•Railing SK45
•SP-E•QuadBox

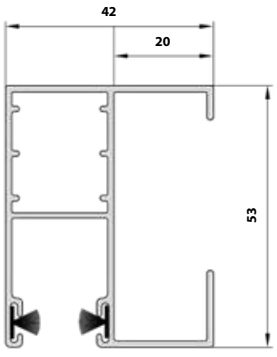

• PP53 ODS20
•SK45•SK90•SKP•SKO-P •Railing SK45
•SP-E•QuadBox

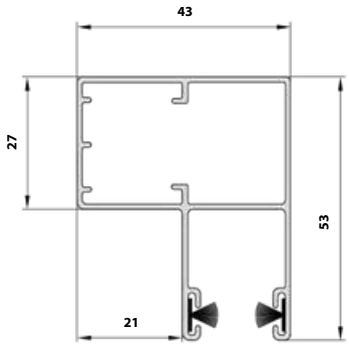

• PPMO53
•SK45•SK90•SKP•SKO-P•SP-E•QuadBox

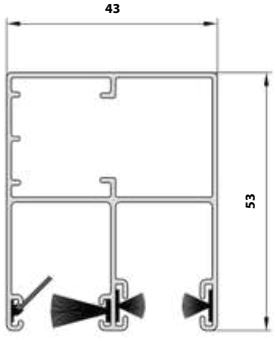

• PPDO53
•SK45•SK90•SKP•SKO-P•SP-E•QuadBox

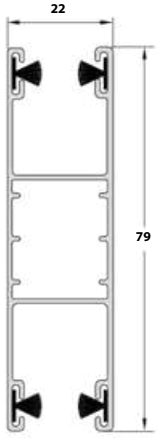

• PPD79
•SK45•SK90•SKP•SKO-P •Railing SK45
•SP-E•QuadBox

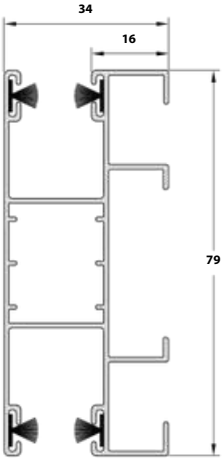

• PPD79 ODS
•SK45•SK90•SKP•SKO-P •Railing SK45
•SP-E•QuadBox

Roller shutter guide cross-sections
adaptive and flush-mounted

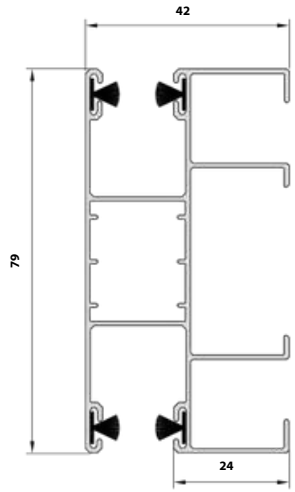

• PPD79 ODS20
•SK45•SK90•SKP•SKO-P •Railing SK45
•SP-E•QuadBox

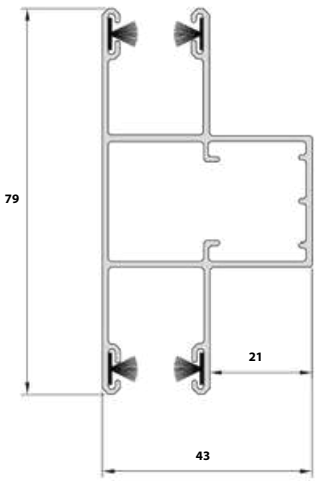

• PPDMO79
•SK45•SK90•SKP•SKO-P•SP-E•QuadBox

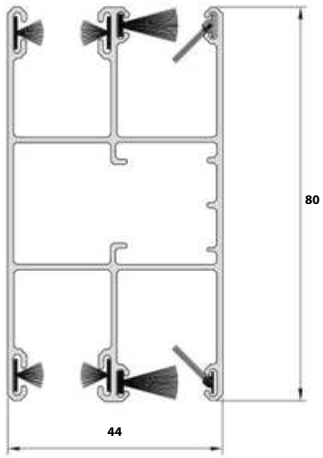

• PPDO79
• SK45•SK90•SKP•SKO-P•SP-E•QuadBox

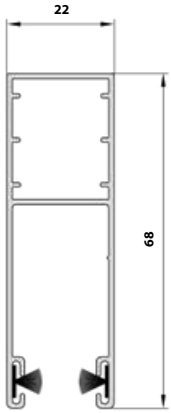

• PP68
•SK45•SK90•SKP•SKO-P
•Railing SK45•SP-E•QuadBox

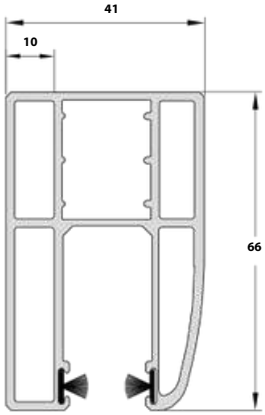

• PPW66 ODS10
•SK45•SK90•SKP•SKO-P
•Railing SK45•SP-E•QuadBox

Roller shutter guide cross-sections
top-mounted

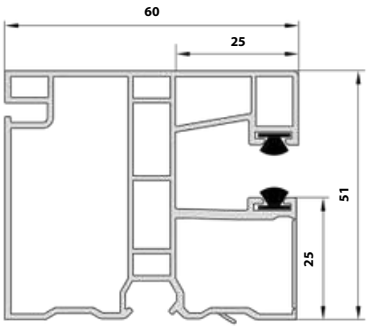

• EX5090
• Expert XT • Elite XT • Neo XT • Roka Top 2
• Roka Top 2 EX •Roka Top 2 PLUS

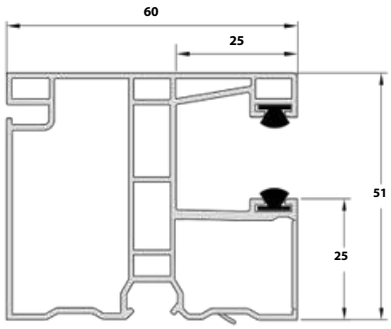

• EX5091
• Expert XT • Elite XT • Neo XT • Roka Top 2
• Roka Top 2 EX •Roka Top 2 PLUS

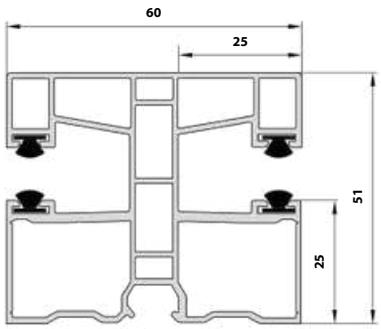

• EX5095
• Expert XT • Elite XT • Neo XT • Roka Top 2
• Roka Top 2 EX •Roka Top 2 PLUS

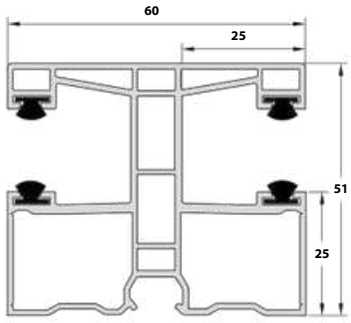

• EX5096
• Expert XT • Elite XT • Neo XT • Roka Top 2
• Roka Top 2 EX •Roka Top 2 PLUS

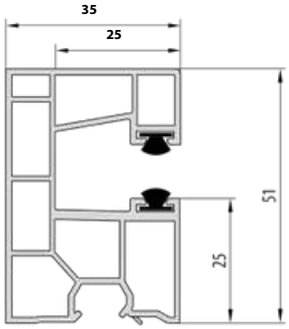

• EX5085*
•ExpertXT•Elite XT • Neo XT

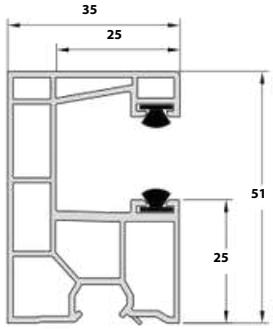

• EX5081*
•ExpertXT•Elite XT • Neo XT

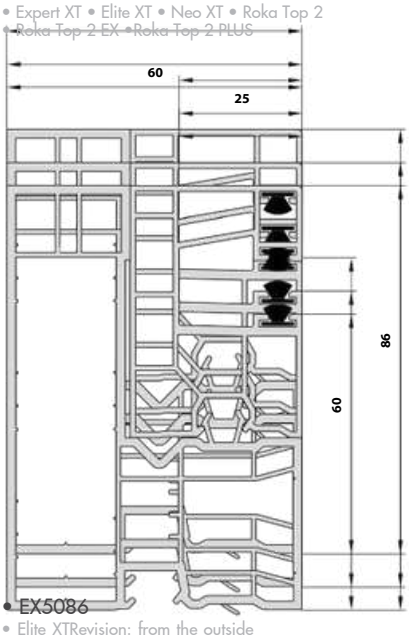

• EX5086
• Elite XTRevision: from the outside
• Neo XT Revision: from the outside

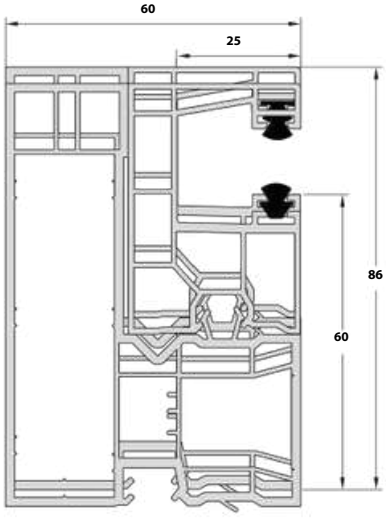

• EX5087
• Elite XTRevision: from the outside
• Neo XT Revision: from the outside

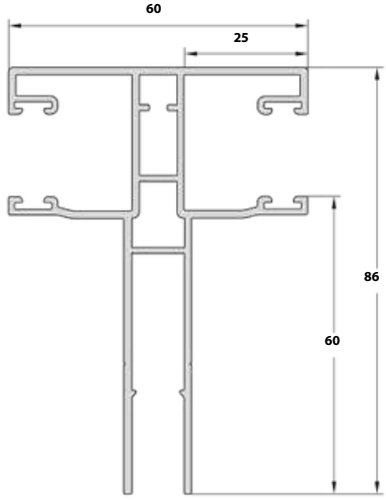

• EX5434
• Elite XTRevision: from the outside • Neo XT Revision: from the outside

Roller shutter guide cross-sections
top-mounted

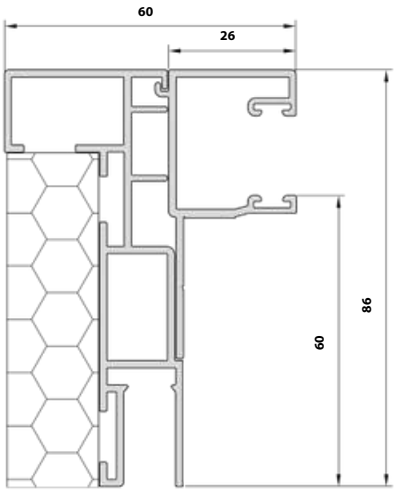

• EX5433
• Elite XT Revision: from the outside
• Neo XT Revision: from the outside

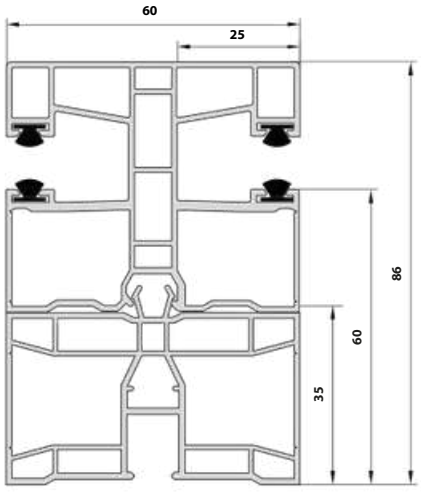

• EX5095 + offset 5082
• Elite XT Revision: from the outside
• Neo XT Revision: from the outside

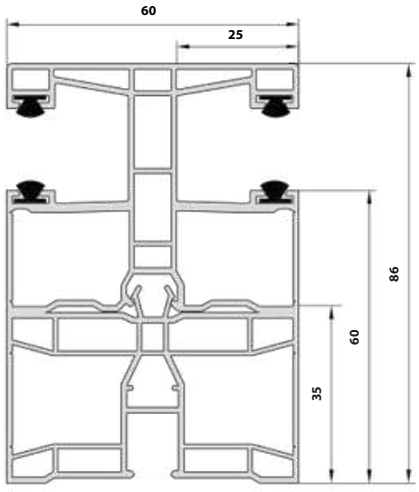

• EX5096 + offset 5082
• Elite XT Revision: from the outside
• Neo XT Revision: from the outside

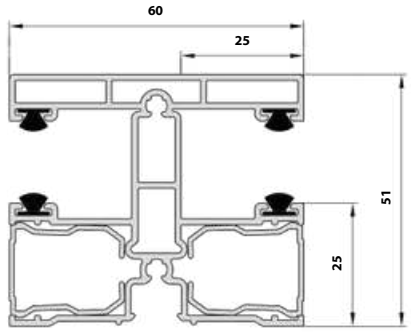

• EX5432
• Expert XT • Elite XT • Neo XT • Roka Top 2
• Roka Top 2 EX •Roka Top 2 PLUS

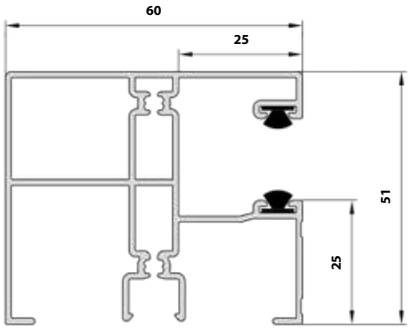

• EX5431
• Expert XT • Elite XT • Neo XT • Roka Top 2
• Roka Top 2 EX •Roka Top 2 PLUS

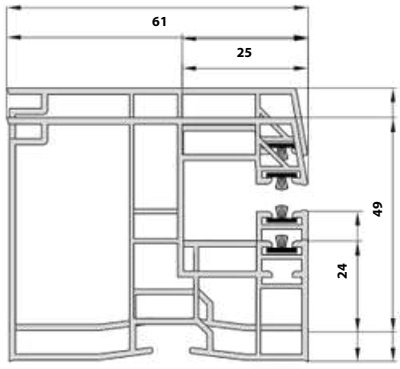

• EXR151
• Exakt

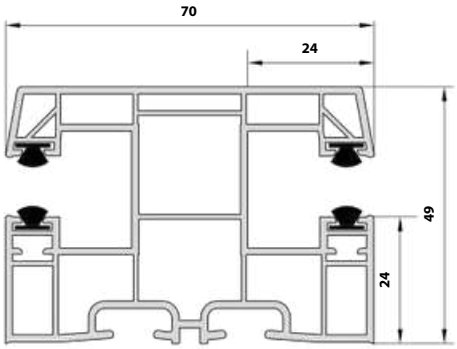

• EXR158
• Exakt

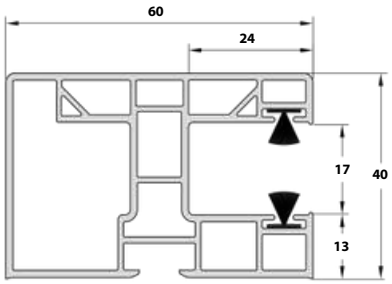

• PP60/17
• Opoterm • Styrotherm

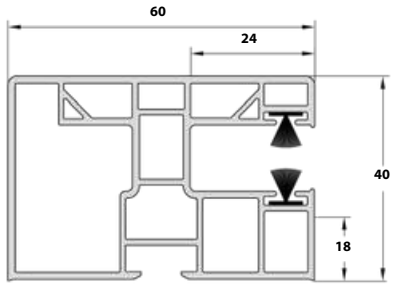

• PP60/12
• Opoterm • Styrotherm

Roller shutter guide cross-sections
top-mounted

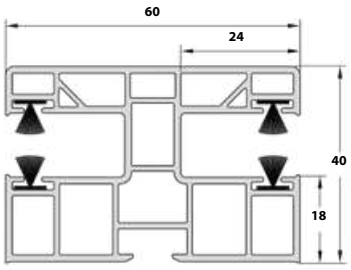

• PPD-P 60/12
•Opoterm, Styrotherm

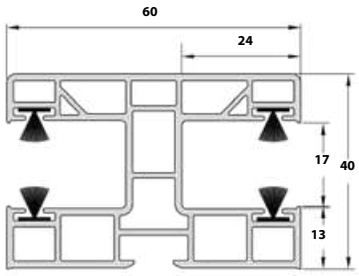

• PPD-P 60/17
• Opoterm, Styrotherm

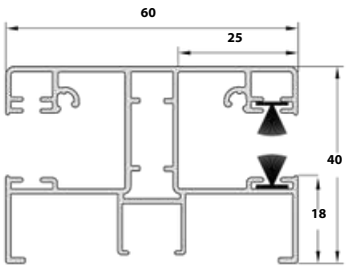

• PPDA 60/12
•Opoterm, Styrotherm

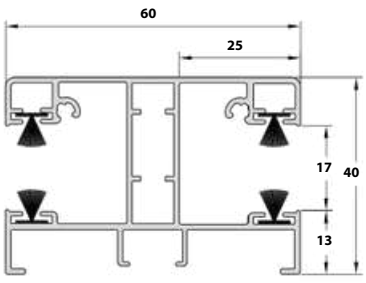

• PPDA 60/17
•Opoterm, Styrotherm

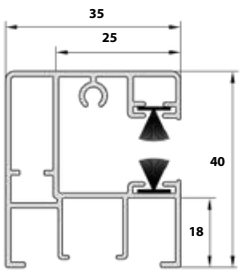

• PPA 35/12*
•Opoterm, Styrotherm

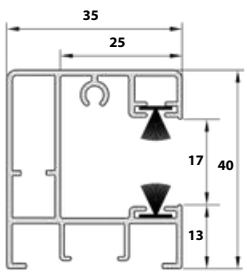

• PPA 35/17*
•Opoterm, Styrotherm

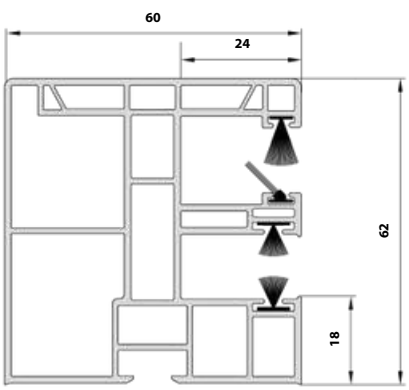

• PPM 60/12
•Opoterm

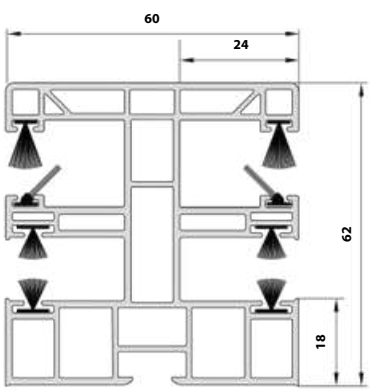

• PPDM-P 60/12
•Opoterm

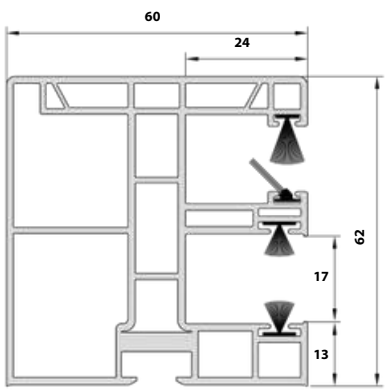

• PPDM-P 60/17
•Opoterm

Roller shutter guide cross-sections
top-mounted

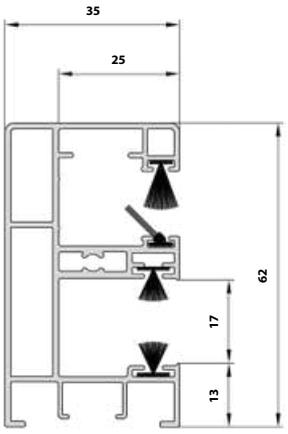

• PPAM 35/12*
•Opoterm

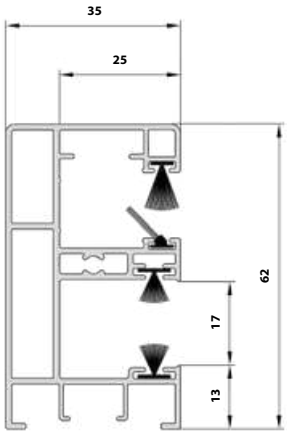

• PPAM 35/17*
•Opoterm

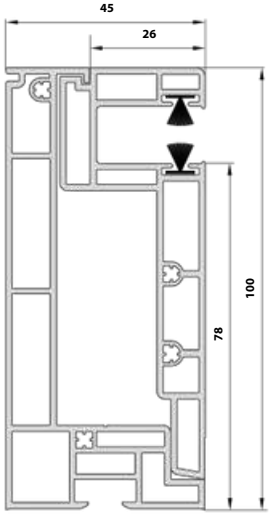

• PPRA12**
•Styroterm Revision: from the outside

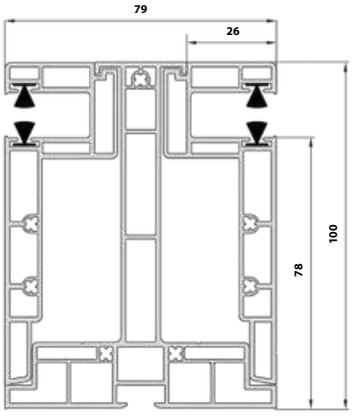

• PPDRA 79
• Styroterm Revision: from the outside

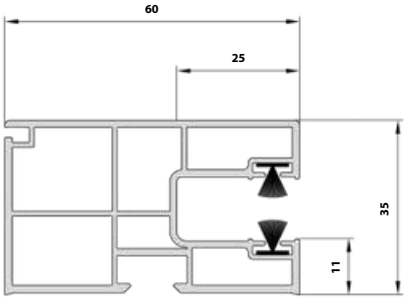

• PG08
• Cleverbox Si, Cleverbox Ri

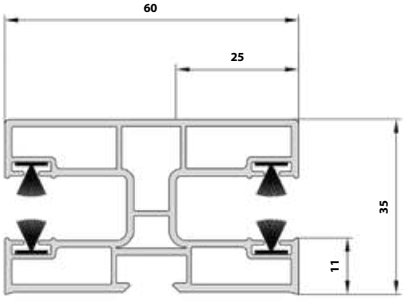

• PG02
• Cleverbox Si, Cleverbox Ri

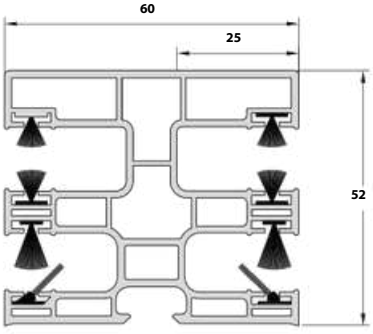

• PG09
• Cleverbox Si, Cleverbox Ri

Roller shutter guide cross-sections
top-mounted

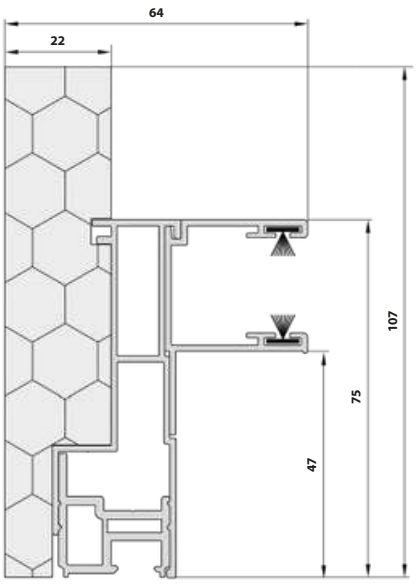

• RGTG 75
•Rokatop2RG / RG EX

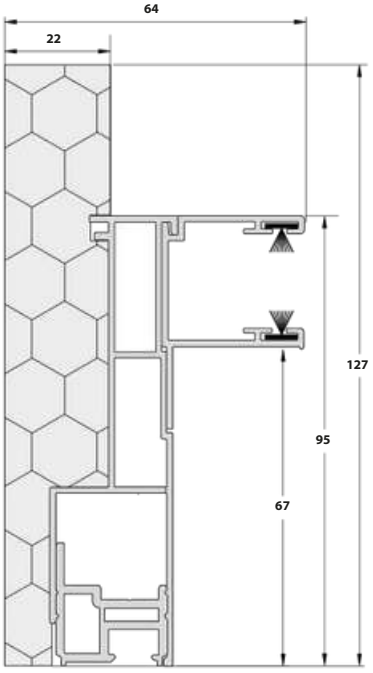

• RGTG 95
•Rokatop2RG / RG EX

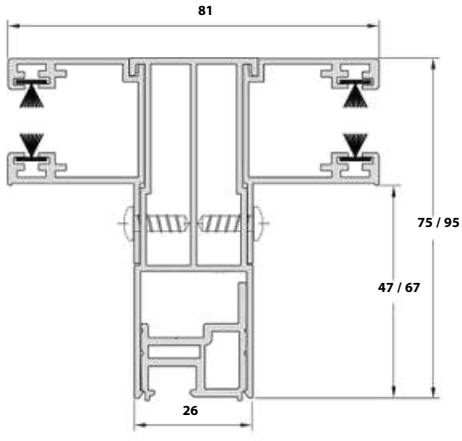

• Pitch guide RGT 75/95
• Rokatop2RG/RGEX

*Guides are mounted with a 25 mm offset towards the center relative to the outer edge of the window frame.

**Guides are mounted with a 15 mm offset towards the center relative to the outer edge of the window frame.

Drives and *accessories*

Traditional solutions are slowly giving way to electric drives, which provide better protection for the home and increase the comfort of its residents. These can be operated with a classic keypad switch, remote control, or smartphone.

Classic roller shutter models can be operated manually:

- using a strap or cord with a winder,
- with a crank mechanism, or with a spring mechanism with a locking bolt.

Motors are equipped with obstacle detection and provide protection against damaging the armor. This means that accidentally placed flower pots on the windowsill or frozen elements of the shutter in winter will not damage the product. The offer includes drives and accessories from brands: Aluprof, Elero, Inel, Rojaflex, Selve, Somfy, Yooda.

BIG DOORS AND WINDOWS

10.01.2025

ul. Spacerowa 4 47-480 Kornice